MA-X

MA

MA-X

GENERALITA' / *FEATURES*

Pompe centrifughe monostadio normalizzate a norma EN 733 adatte per le più svariate esigenze in campo civile, agricolo, industriale o impiantistico in generale. Possono essere accoppiate a motori a 2 e 4 poli. Disponibile anche in vernice inox AISI 304.

Single stage centrifugal pumps EN 733 Standards. Suitable for most fields: civil, industrial, agricultural. They can be coupled with both 2 and 4 pole motors. Also avaiable in AISI 304 version.

MATERIALI / *MATERIALS*

- Corpo pompa e girante in ghisa
(a richiesta girante in bronzo e corpo girante acciaio AISI 316 (MA-X))
- Albero in acciaio inox AISI 304
- Tenuta meccanica in ceramica grafite

- *Impeller: pump body and motor bracket cast-iron*
(bronze impeller and stainless AISI 316 pump body and impeller (MA-X) upon request)
- *Motor shaft: stainless steel AISI 304*
- *Ceramic graphite mechanical seal*

LIMITI DI IMPIEGO / *OPERATING CONDITIONS*

- Pressione massima: 10 bar
- Temperatura liquido max: 90° C

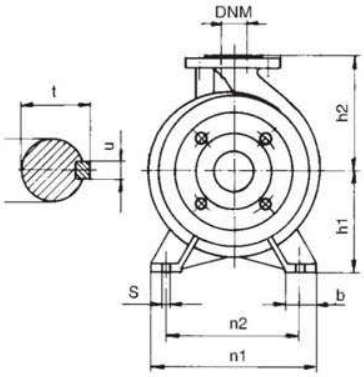

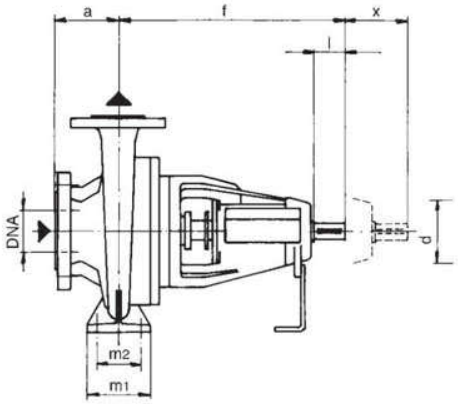

DIMENSIONI mm *DIMENSIONS mm*				
DN	D	K	holes	
			n°	ø
32	140	100	4	18
40	150	110	4	18
50	165	125	4	18
65	185	145	4	18
80	200	160	4	18
100	220	180	8	18

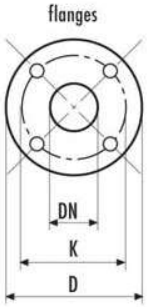

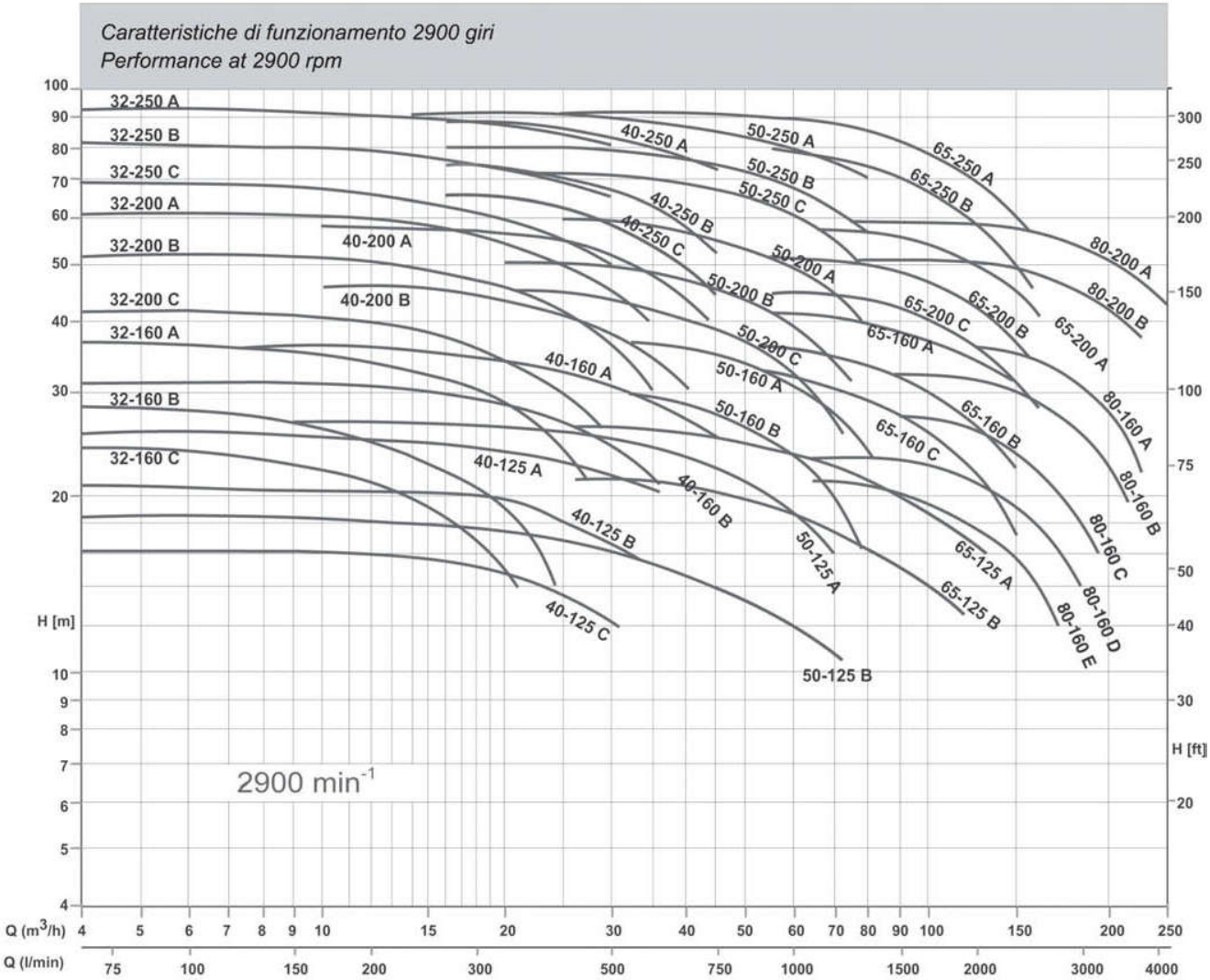

MODELLO POMPA *PUMP'S MODEL*	DIMENSIONI POMPA mm *PUMP'S DIMENSIONS mm*																	
	DNA	DNM	a	f	h1	h2	m1	m2	n1	n2	s	b	l	d	t	u	x	w
MA-X-4MA-X 32-160	50	32	80	360	132	160	100	70	240	190	14	50	50	24	27	8	100	260
MA-X-4MA-X 32-200			80	360	160	180	100	70	240	190	14	50	50	24	27	8	100	260
MA-X-4MA-X 32-250			100	360	180	225	125	95	320	250	14	65	50	24	27	8	100	260
MA-X-4MA-X 40-125	65	40	80	360	112	140	100	70	210	160	14	50	50	24	27	8	100	260
MA-X-4MA-X 40-160			80	360	132	160	100	70	240	190	14	50	50	24	27	8	100	260
MA-X-4MA-X 40-200			100	360	160	180	100	70	265	212	14	50	50	24	27	8	100	260
MA-X-4MA-X 40-250			100	360	180	225	125	95	320	250	14	65	50	24	27	8	100	260
MA-X-4MA-X 50-125	65	50	100	360	132	160	100	70	240	190	14	50	50	24	27	8	100	260
MA-X-4MA-X 50-160			100	360	160	180	100	70	265	212	14	50	50	24	27	8	100	260
MA-X-4MA-X 50-200			100	360	160	200	100	70	265	212	14	50	50	24	27	8	100	260
MA-X-4MA-X 50-250			100	360	180	225	125	95	320	250	14	65	50	24	27	8	100	260
MA-X-4MA-X 65-125	80	65	100	360	160	180	125	95	280	212	14	65	50	24	27	8	100	260
MA-X-4MA-X 65-160			100	360	160	200	125	95	280	212	14	65	50	24	27	8	100	260
MA-X-4MA-X 65-200			100	360	180	225	125	95	320	250	14	65	50	24	27	8	140	260
MA-X-4MA-X 65-250			100	470	200	250	160	120	360	280	19	80	80	32	35	10	140	260
MA-X-4MA-X 65-315			125	470	225	280	160	120	400	315	19	80	80	32	35	10	140	340
MA-X-4MA-X 80-160	100	80	125	360	180	225	125	95	320	250	14	65	50	24	27	8	140	260
MA-X-4MA-X 80-200			125	470	180	250	125	95	345	280	14	65	80	32	35	10	140	340

MODELLO POMPA *PUMP'S MODEL*	Pot. nominale *Nominal power* P2 kW	Motore *Motor size*	Q (m^3/h - l/min)														
			0	4.5	6	7.5	9	12	15	18	21	24	27	30	33	36	39
			0	75	100	125	150	200	250	300	350	400	450	500	550	600	650
			Prevalenza manometrica totale in m C.A. - *Total head in meters w.c.*														
MA-X 32-160 C	1.5 2.2	90S 90L	24.7 *0.69*	24.4 *0.96*	24.1 *1.15*	23.6 *1.26*	23.0 *1.40*	21.5 *1.50*	19.6 *1.55*	17.2 *1.70*	14.1 *1.74*						
MA-X 32-160 B	2.2	90L	29 *0.93*		28.5 *1.36*	28.0 *1.50*	27.3 *1.67*	25.7 *1.83*	23.8 *1.99*	21.4 *2.15*	18.5 *2.24*	14.8 *2.32*					
MA-X 32-160 A	3 4	100L 112M	36.8 *1.36*		36.4 *1.87*	36.0 *2.05*	35.4 *2.25*	34.2 *2.50*	32.8 *2.70*	31.1 *2.90*	28.8 *3.10*	26.0 *3.25*	22.3 *3.39*				
MA-X 32-200 C	4 5.5	112M 132S	41.0 *1.95*		40.0 *2.54*	39.5 *2.70*	38.9 *2.87*	37.5 *3.17*	36.0 *3.46*	34.2 *3.73*	32.2 *4.00*	30.0 *4.21*	27.0 *4.42*				
MA-X 32-200 B	5.5 7.5	132S 132S	52.8 *2.96*		52.0 *3.82*	51.5 *4.03*	51.0 *4.23*	50.0 *4.54*	48.5 *4.96*	46.8 *5.34*	45.0 *5.72*	42.7 *5.93*	40.1 *6.14*	37.0 *6.48*	33.3 *6.66*	28.7 *6.84*	
MA-X 32-200 A	7.5 9.2	132S 132M	61.0 *3.36*		60.5 *4.08*	60.1 *4.08*	59.6 *4.62*	58.5 *5.11*	57.2 *5.60*	55.5 *6.09*	53.7 *6.39*	51.5 *6.73*	49.0 *7.24*	46.2 *7.56*	42.7 *7.84*	38.5 *8.12*	
MA-X 32-250 C	9.2	132M	70.0 *4.89*			68.5 *6.15*	68.0 *6.48*	67.0 *7.11*	65.5 *7.74*	63.5 *8.19*	61.5 *8.54*	58.7 *8.89*	55.0 *9.24*	50.5 *9.63*			
MA-X 32-250 B	11 15	160M 160M	82.0 *6.45*			81.0 *8.02*	80.5 *8.35*	79.5 *9.00*	78.5 *9.56*	77.0 *10.01*	75.0 *10.5*	72.6 *11.2*	70.0 *11.8*	66.5 *12.1*			
MA-X 32-250 A	15	160M	93.0 *7.85*			92.5 *9.30*	92.0 *9.88*	91.5 *10.7*	90.5 *11.4*	89.5 *12.2*	88.0 *12.9*	85.7 *13.6*	83.5 *14.3*	80.0 *14.9*			
MA-X 40-125 C	1.5 2.2	90S 90L	17.4 *0.69*			17.6 *1.02*	17.5 *1.12*	17.3 *1.21*	16.9 *1.30*	16.4 *1.39*	15.8 *1.48*	15.1 *1.57*	14.2 *1.63*	13.3 *1.70*			
MA-X 40-125 B	2.2	90L	20.7 *0.90*				21.3 *1.26*	21.2 *1.48*	21.0 *1.61*	20.6 *1.80*	20.1 *1.91*	19.4 *2.02*	18.7 *2.13*	17.9 *2.22*	17.0 *2.32*		
MA-X 40-125 A	3	100L	25.2 *1.08*				25.8 *1.64*	25.8 *1.85*	25.6 *2.05*	25.4 *2.25*	24.9 *2.45*	24.4 *2.59*	23.7 *2.73*	22.9 *2.88*	22.0 *2.91*	21.1 *2.94*	
MA-X 40-160 B	3 4	100L 112M	30.0 *1.46*				30.1 *2.09*	30.0 *2.30*	29.6 *2.50*	29.0 *2.71*	28.2 *2.93*	27.1 *3.14*	25.9 *3.26*	24.4 *3.37*	22.8 *3.49*	21.0 *3.56*	
MA-X 40-160 A	4 5.5	112 132S	35.4 *1.95*				35.6 *2.68*	35.5 *2.98*	35.3 *3.23*	35.0 *3.49*	34.2 *3.74*	33.2 *3.89*	32.0 *4.04*	30.6 *4.18*	29.0 *3.34*	27.3 *4.59*	25.4 *4.70*
MA-X 40-200 B	5.5 7.5	132S 132S	46.7 *2.78*				47.0 *3.90*	46.8 *4.17*	46.4 *4.44*	45.6 *4.78*	44.5 *5.12*	43.2 *5.40*	41.6 *5.69*	39.9 *5.94*	37.9 *6.14*	35.8 *6.33*	33.4 *6.40*
MA-X 40-200 A	7.5 9.2	132S 132M	56.4 *3.56*				57.8 *4.67*	58.0 *5.05*	57.9 *5.39*	57.6 *5.90*	56.9 *6.40*	56.0 *6.87*	54.7 *7.17*	53.0 *7.47*	51.1 *7.84*	48.9 *8.20*	46.5 *8.50*
MA-X 40-250 C	9.2 11	132M 160M	65.0 *4.3*				64.3 *5.80*	63.9 *6.20*	63.3 *6.70*	62.6 *7.30*	61.5 *7.90*	60.2 *8.40*	58.8 *8.80*	56.9 *9.10*	54.5 *9.50*	51.6 *9.80*	48.5 *10.10*
MA-X 40-250 B	11 15	160M 160M	75.5 *6.27*				74.6 *7.61*	74.2 *8.32*	73.5 *8.90*	72.7 *9.45*	71.7 *10.0*	70.4 *10.6*	69.0 *11.2*	67.2 *11.7*	65.0 *12.2*	62.5 *12.6*	59.5 *13.1*
MA-X 40-250 A	15 18.5	160M 160L	91.5 *8.10*				90.4 *9.52*	89.9 *10.3*	89.3 *11.0*	88.5 *11.7*	87.5 *12.4*	86.6 *13.1*	85.5 *13.7*	84.0 *14.2*	82.5 *14.9*	80.5 *15.5*	78.5 *16.2*
MA-X 50-125 B	3 4	100L 112	19.9 *1.22*					20.2 *1.77*	20.2 *1.94*	20.1 *2.11*	20.0 *2.22*	19.8 *2.33*	19.3 *2.44*	19.1 *2.55*	18.7 *2.65*	18.3 *2.76*	17.8 *2.87*
MA-X 50-125 A	4 5.5	112 132S	24.5 *1.78*						25.0 *2.54*	24.9 *2.70*	24.8 *2.85*	24.6 *3.01*	24.4 *3.17*	24.2 *3.33*	23.8 *3.42*	23.5 *3.50*	23.1 *3.59*
MA-X 50-160 B	5.5 7.5	132S 132S	31.1 *2.01*								32.1 *3.62*	32.0 *3.85*	31.7 *4.07*	31.4 *4.19*	31.0 *4.35*	30.4 *4.48*	29.7 *4.64*
MA-X 50-160 A	7.5	132S	36.7 *2.78*								37.9 *4.48*	37.8 *4.75*	37.7 *5.02*	37.4 *5.29*	37.1 *5.55*	36.6 *5.83*	36.1 *6.09*
MA-X 50-200 C	9.2	132M	46.0 *3.25*									45.7 *6.08*	45.1 *6.30*	44.5 *6.53*	43.7 *6.76*	42.9 *7.11*	42.0 *7.46*
MA-X 50-200 B	11	160M	50.8 *3.38*									51.0 *6.68*	50.5 *7.53*	50.0 *7.80*	49.3 *8.20*	48.5 *8.46*	47.7 *8.81*
MA-X 50-200 A	15	160M	58.5 *4.63*									58.3 *7.89*	58.0 *8.28*	57.5 *8.67*	57.0 *9.08*	56.4 *9.49*	55.7 *9.89*
MA-X 50-250 C	15 18.5	160M 160L	71.5 *6.74*										70.8 *11.3*	70.3 *11.9*	69.7 *12.5*	69.0 *12.9*	68.3 *13.4*
MA-X 50-250 B	18.5 22	160L 180M	78.0										78.0 *12.0*	77.4 *12.7*	76.8 *13.3*	76.1 *14.0*	75.3 *14.6*
MA-X 50-250 A	22 30	180M 200L	90.0 *6.87*										89.5 *15.6*	88.8 *16.3*	88.3 *17.0*	87.7 *17.6*	86.9 *18.2*
MA-X 65-125 B	5.5	132S	20.9 *10.1*											22.0 *3.66*	22.0 *3.76*	21.9 *3.86*	21.8 *3.98*
MA-X 65-125 A	7.5	132S	24.5 *2.39*											26.4 *4.05*	26.4 *4.25*	26.4 *4.44*	26.3 *4.67*
MA-X 65-160 C	9.2 11	132M 160M	29.8 *2.99*														
MA-X 65-160 B	11	160M	33.0 *3.29*														
MA-X 65-160 A	15	160M	39.2 *3.17*														
MA-X 65-200 C	15 18.5	160M 160L	42.3 *4.80*														
MA-X 65-200 B	18.5	160L	46.8 *5.06*														
MA-X 65-200 A	22 30	180M 200L	54.0 *5.37*														
MA-X 65-250 B	30	200L	81.0 *7.70*														
MA-X 65-250 A	37	200L	90.0 *10.6*														
MA-X 80-160 E	9.2	132M	21.4 *3.7*														
MA-X 80-160 D	11	160M	25.4 *12.3*														
MA-X 80-160 C	15	160M	29.7 *3.90*														
MA-X 80-160 B	18.5	160L	34.0 *4.88*														
MA-X 80-160 A	22	160L	38.8 *5.41*														
MA-X 80-200 B	30	200L	49.0 *7.57*														
MA-X 80-200 A	37	200L	58.0 *9.30*														

Q (m^3/h - l/min)																				
42	48	54	60	66	72	78	84	96	108	120	132	144	156	168	180	195	210	225	240
700	800	900	1000	1100	1200	1300	1400	1600	1800	2000	2200	2400	2600	2800	3000	3250	3500	3750	4000

Prevalenza manometrica totale in m C.A. - *Total head in meters w.c.*

2900 giri-2900 rpm

43.9 / 8.80																			
45.5 / 10.50																			
56.0 / 13.5																			
76.0 / 17.0																			
17.4 / 2.98	16.4 / 3.10	15.3 / 3.20	14.0 / 3.30	12.7 / 3.39	11.2 / 3.43														
22.7 / 3.87	21.8 / 4.14	20.8 / 4.42	19.6 / 4.58	18.1 / 4.74	16.5 / 4.90														
28.9 / 4.80	27.3 / 4.92	25.3 / 5.14	23.1 / 5.36	20.7 / 5.77	18.0 / 6.18	15.2 / 6.18													
35.4 / 6.37	33.9 / 6.55	32.1 / 6.90	30.0 / 7.24	27.8 / 7.42	25.3 / 7.58	22.6 / 7.71													
40.2 / 7.82	38.5 / 8.17	35.9 / 8.33	33.0 / 8.50	29.0 / 8.78	24.5 / 9.06														
46.8 / 9.15	44.7 / 9.50	42.2 / 9.85	39.5 / 10.1	35.9 / 10.4	32.0 / 10.6														
55.0 / 10.3	53.2 / 10.7	51.3 / 11.3	49.0 / 11.9	46.3 / 12.3	42.8 / 12.7	38.8 / 13.0													
67.6 / 13.8	66.0 / 14.6	64.0 / 15.5	61.5 / 16.3	58.6 / 17.0	55.0 / 17.7	50.5 / 18.4													
74.5 / 15.3	72.8 / 15.9	70.6 / 16.9	68.2 / 17.9	65.5 / 18.6	62.2 / 19.3	58.3 / 20.2													
86.1 / 19.2	84.5 / 20.1	82.7 / 21.1	80.5 / 22.0	78.0 / 23.0	75.2 / 23.9	71.7 / 24.8													
21.7 / 4.11	21.4 / 4.28	21.0 / 4.45	20.6 / 4.62	20.1 / 4.73	19.6 / 4.84	19.0 / 4.94	18.3 / 5.19	16.6 / 5.44	14.7 / 5.58	12.6 / 5.71									
26.3 / 4.90	26.1 / 5.13	25.9 / 5.26	25.6 / 5.59	25.3 / 5.96	24.9 / 6.39	24.5 / 6.62	24.0 / 6.85	22.7 / 7.07	21.0 / 7.30	18.9 / 7.58	16.5 / 7.66								
31.2 / 5.92	31.1 / 6.29	30.8 / 6.66	30.5 / 7.04	30.1 / 7.41	29.6 / 7.79	29.0 / 8.16	28.3 / 8.59	26.6 / 9.02	24.6 / 9.45	22.1 / 9.88	19.3 / 9.85	16.0 / 9.82							
34.6 / 6.72	34.4 / 7.22	34.2 / 7.73	34.0 / 8.24	33.7 / 8.57	33.3 / 8.90	32.8 / 9.23	32.1 / 9.56	30.6 / 10.1	28.8 / 10.6	26.7 / 11.2	24.1 / 11.1	21.1 / 11.0							
40.6 / 8.05	40.6 / 8.60	40.4 / 9.15	40.2 / 9.70	40.0 / 10.2	39.7 / 10.8	39.4 / 11.3	38.9 / 11.9	37.7 / 12.4	36.2 / 13.0	34.3 / 13.6	32.2 / 13.6	29.8 / 13.7							
		44.8 / 10.4	44.5 / 11.1	44.1 / 11.8	43.7 / 12.4	43.0 / 13.1	42.3 / 13.8	40.5 / 14.5	38.0 / 15.4	35.3 / 16.3	32.0 / 16.8								
		49.5 / 11.5	49.3 / 12.1	49.0 / 12.8	48.5 / 13.5	48.0 / 14.2	47.3 / 14.9	45.5 / 15.9	43.5 / 17.0	41.0 / 18.0	38.0 / 18.7								
		56.7 / 14.8	56.5 / 15.6	56.2 / 16.5	55.7 / 17.3	55.2 / 18.2	54.7 / 18.9	53.3 / 19.9	51.6 / 21.0	49.6 / 22.0	47.1 / 23.0	44.0 / 24.0							
		79.5 / 20.9	78.5 / 22.4	77.3 / 23.3	76.0 / 24.3	74.5 / 25.2	73.0 / 26.3	69.3 / 27.5	65.0 / 28.7	60.0 / 29.8	54.5 / 30.7	48.5 / 31.5							
		89.5 / 23.7	88.5 / 25.7	87.5 / 26.7	86.5 / 27.8	85.5 / 28.9	84.0 / 29.9	80.5 / 31.7	76.5 / 33.6	72.0 / 35.4	66.5 / 36.1	60.5 / 36.9	54.0 / 37.6						
				22.4 / 6.3	22.1 / 6.6	21.6 / 6.7	21.2 / 7.0	20.2 / 7.4	19.2 / 7.7	18.0 / 7.9	16.8 / 8.3	15.4 / 8.4	13.7 / 8.5	12.0 / 8.5					
				26.4 / 7.79	26.1 / 8.00	25.7 / 8.23	25.3 / 8.44	24.4 / 8.66	23.6 / 8.88	22.5 / 9.35	21.3 / 9.8	20.0 / 10.3	18.5 / 10.4	16.9 / 10.5	15.1 / 10.5				
				30.7 / 8.3	30.5 / 8.8	30.3 / 9.3	29.9 / 9.7	29.2 / 10.1	28.1 / 10.5	27.1 / 10.9	26.0 / 11.4	24.7 / 11.7	23.1 / 12.0	21.5 / 12.3	19.7 / 12.6	17.2 / 12.7			
				35.0 / 9.00	35.0 / 9.65	34.8 / 10.3	34.6 / 10.9	34.0 / 11.5	33.3 / 12.0	32.5 / 12.6	31.6 / 13.1	30.5 / 13.6	29.2 / 14.1	27.8 / 14.6	26.0 / 14.7	23.6 / 14.8	21.0 / 14.9		
				39.8 / 12.5	39.7 / 12.9	39.6 / 13.7	39.4 / 14.5	38.9 / 15.2	38.2 / 16.0	37.5 / 16.7	36.7 / 17.3	35.7 / 17.9	34.5 / 18.5	33.2 / 19.0	31.6 / 19.4	29.4 / 19.6	26.8 / 19.8	23.5 / 20.0	
							50.8 / 18.5	50.6 / 20.0	50.3 / 21.3	49.8 / 22.6	49.3 / 23.9	48.6 / 25.2	47.7 / 26.4	46.7 / 27.5	45.5 / 28.5	44.8 / 29.6	41.6 / 30.6	38.6 / 31.3	
								59.6 / 24.4	59.2 / 25.8	58.6 / 27.2	58.0 / 28.6	57.3 / 30.0	56.4 / 31.5	55.5 / 33.0	54.3 / 34.5	52.7 / 35.9	50.8 / 37.4	48.5 / 38.3	46.1 / 39.2

MODELLO POMPA *PUMP'S MODEL*	Pot. nominale *Nominal power* P2 kW	Motore *Motor size*	Q (m^3/h - l/min)																	
			0	1.5	3	4.5	6	7.5	9	10.5	12	15	18	21	24	27	30	33	36	
			0	25	50	75	100	125	150	175	200	250	300	350	400	450	500	550	600	
			Prevalenza manometrica totale in m C.A. - *Total head in meters w.c.*																	
4MA-X 32-160 C	0.37	71	6.4 *0.17*	6.4 *0.20*	6.3 *0.22*	6.0 *0.24*	5.8 *0.27*	5.3 *0.29*	4.8 *0.31*	4.0 *0.31*	3.1 *0.32*									
4MA-X 32-160 B	0.37	71	7.4 *0.19*	7.4 *0.22*	7.3 *0.25*	6.9 *0.28*	6.6 *0.30*	6.1 *0.32*	5.5 *0.34*	4.8 *0.35*	3.8 *0.37*									
4MA-X 32-160 A	0.55	80	9.2 *0.24*	9.2 *0.28*	9.1 *0.31*	8.9 *0.33*	8.6 *0.37*	8.3 *0.39*	7.8 *0.42*	7.3 *0.44*	6.6 *0.46*	4.5 *0.48*								
4MA-X 32-200 C	0.75	80	11.0 *0.26*		10.8 *0.39*	10.6 *0.43*	10.2 *0.47*	9.9 *0.51*	9.4 *0.54*	8.9 *0.57*	8.4 *0.59*	6.7 *0.66*	4.2 *0.71*							
4MA-X 32-200 B	1.1	90S	13. *0.40*		13.1 *0.49*	12.9 *0.53*	12.6 *0.59*	12.1 *0.63*	11.6 *0.69*	11 *0.73*	10.5 *0.77*	9.1 *0.82*	6.8 *0.85*							
4MA-X 32-200 A	1.1	90S	4 *0.44*		15.7 *0.53*	15.5 *0.57*	15.3 *0.66*	15.0 *0.71*	14.5 *0.77*	13.8 *0.82*	12.2 *0.88*	11.7 *0.98*	9.5 *1.04*	6.8 *1.10*						
4MA-X 32-250 C	1.5	90L	15.9 *0.05*		17.2 *0.75*	16.9 *0.79*	16.6 *0.85*	16.2 *0.90*	15.7 *0.95*	15.1 *1.00*	14.4 *1.04*	12.5 *1.09*	10.0 *1.18*	6.5 *1.21*						
4MA-X 32-250 B	1.5	90L	17.5 *0.75*		20.0 *0.87*	19.7 *0.93*	19.4 *1.00*	19.0 *1.06*	18.4 *1.14*	17.8 *1.19*	17.0 *1.24*	15.3 *1.33*	12.6 *1.39*	8.3 *1.42*						
4MA-X 32-250 A	2.2	100L	20.3 *0.80*		22.2 *0.95*	21.9 *1.03*	21.6 *1.10*	21.3 *1.18*	20.7 *1.24*	20.0 *1.30*	18.9 *1.36*	17.2 *1.46*	14.8 *1.52*	9.1 *1.55*						
4MA-X 40-125 C	0.37	71	22.6 *0.17*			4.8 *0.20*	4.7 *0.21*	4.6 *0.23*	4.5 *0.25*	4.4 *0.26*	4.2 *0.28*	3.8 *0.29*	3.2 *0.31*	2.4 *0.32*						
4MA-X 40-125 B	0.37	71	4.6 *0.19*			5.6 *0.23*	5.6 *0.25*	5.5 *0.27*	5.4 *0.29*	5.3 *0.30*	5.1 *0.32*	4.7 *0.35*	4.1 *0.36*	3.4 *0.37*						
4MA-X 40-125 A	0.55	80	5.5 *0.24*			6.5 *0.29*	6.5 *0.31*	6.4 *0.33*	6.3 *0.35*	6.2 *0.37*	6.0 *0.39*	5.6 *0.42*	5.1 *0.44*	4.4 *0.46*	3.6 *0.48*					
4MA-X 40-160 B	0.55	80	6.4 *0.22*			7.8 *0.31*	7.9 *0.36*	7.7 *0.39*	7.5 *0.42*	7.3 *0.44*	7.1 *0.46*	6.4 *0.48*	5.2 *0.50*	4.0 *0.51*	2.7 *0.52*					
4MA-X 40-160 A	0.75	80	7.7 *0.23*			9.0 *0.35*	9.1 *0.39*	9.0 *0.42*	8.8 *0.46*	8.6 *0.48*	8.4 *0.50*	7.6 *0.54*	6.7 *0.58*	5.7 *0.60*	4.3 *0.61*					
4MA-X 40-200 B	1.1	90S	8.9 *0.38*				11.8 *0.54*	11.7 *0.58*	11.5 *0.62*	11.2 *0.67*	10.9 *0.71*	10 *0.78*	8.9 *0.81*	7.3 *0.85*	5.4 *0.87*					
4MA-X 40-200 A	1.1 1.5	90S 90L	11.7 *0.40*				14.6 *0.68*	14.5 *0.77*	14.3 *0.79*	14.1 *0.84*	13.9 *0.88*	13.0 *0.97*	12.0 *1.05*	10.7 *1.13*	9.2 *1.19*					
4MA-X 40-250 C	1.1 1.5	90S 90L	14.5 *0.35*					15.1 *0.82*	14.9 *0.89*	14.5 *0.95*	14.1 *1*	12.9 *1.08*	11.2 *1.18*	9.1 *1.26*	6.8 *1.31*					
4MA-X 40-250 B	2.2	100L	15. *0.48*					18.4 *0.80*	18.1 *1.19*	17.7 *1.24*	17.3 *1.31*	16.3 *1.49*	14.7 *1.61*	12.7 *1.69*	10.0 *1.76*	6.7 *1.83*				
4MA-X 40-250 A	3	100L	8 *0.80*					21.9 *1.36*	21.7 *1.45*	21.4 *1.54*	21.0 *1.62*	20.0 *1.79*	18.5 *1.93*	16.8 *2.07*	14.4 *2.14*	11.3 *2.21*	7.1 *2.29*			
4MA-X 50-125 B	0.55	80	19.1 *0.16*						5.7 *0.24*	5.7 *0.26*	5.6 *0.29*	5.5 *0.34*	5.3 *0.39*	5.1 *0.42*	4.9 *0.46*	4.6 *0.46*	4.3 *0.48*	3.8 *0.49*	3.3 *0.49*	
4MA-X 50-125 A	0.75	80	22.7 *0.24*						6.6 *0.39*	6.6 *0.41*	6.5 *0.43*	6.5 *0.46*	6.3 *0.49*	6.2 *0.53*	6.0 *0.57*	5.7 *0.61*	5.4 *0.64*	5.0 *0.66*	4.6 *0.66*	
4MA-X 50-160 B	0.75	80	5.5 *0.23*						8 *0.43*	7.9 *0.45*	7.8 *0.47*	7.7 *0.51*	7.3 *0.56*	6.9 *0.60*	6.4 *0.63*	5.9 *0.65*	5.3 *0.66*	4.7 *0.67*	4 *0.68*	
4MA-X 50-160 A	1.1	90S	6.4 *0.34*						9.4 *0.55*	9.4 *0.57*	9.3 *0.59*	9.2 *0.65*	9 *0.72*	8.7 *0.77*	8.3 *0.80*	7.8 *0.82*	7.2 *0.84*	6.7 *0.86*	6 *0.87*	
4MA-X 50-200 C	1.1	90S	7.9 *0.39*						12 *0.63*	11.8 *0.68*	11.7 *0.72*	11.2 *0.79*	10.7 *0.83*	10 *0.86*	9.3 *0.89*	8.2 *0.91*	7.2 *0.93*	6 *0.94*	4.6 *0.94*	
4MA-X 50-200 B	1.5	90L	9.4 *0.48*							13.1 *0.77*	13.1 *0.83*	12.7 *0.92*	12.2 *1.02*	11.6 *1.09*	10.9 *1.14*	10.0 *1.18*	9.2 *1.22*	8.2 *1.24*	7.0 *1.27*	
4MA-X 50-200 A	1.5	90L	12 *0.54*							14.7 *0.87*	14.5 *0.92*	14.4 *1.03*	13.9 *1.14*	13.4 *1.22*	12.7 *1.28*	11.9 *1.32*	11.0 *1.36*	10.0 *1.40*	8.9 *1.43*	
4MA-X 50-250 C	2.2 3	100L 100L	13.1 *0.61*								18.3 *1.30*	18.0 *1.38*	17.5 *1.53*	17.0 *1.66*	16.5 *1.79*	15.6 *1.88*	14.8 *1.98*	14.0 *2.06*	13.1 *2.14*	
4MA-X 50-250 B	3	100L	14.8 *0.79*									19.6 *1.58*	19.1 *1.72*	18.8 *1.85*	18.2 *1.97*	17.5 *2.07*	16.7 *2.19*	15.7 *2.28*	14.6 *2.37*	
4MA-X 50-250 A	4	112M	18.5 *0.90*									22.7 *1.84*	22.5 *2.07*	22.2 *2.21*	21.8 *2.42*	21.1 *2.60*	20.4 *2.78*	19.5 *2.95*	18.7 *3.12*	
4MA-X 65-125 B	0.75	80	19.9 *0.33*										5.3 *0.51*	5.3 *0.53*	5.2 *0.56*	5.2 *0.59*	5.1 *0.60*	5.0 *0.63*	4.8 *0.66*	
4MA-X 65-125 A	1.1	90S	23.0 *0.41*											6.3 *0.64*	6.2 *0.67*	6.2 *0.70*	6.1 *0.74*	6.0 *0.77*	5.9 *0.80*	
4MA-X 65-160 C	1.5	90L	5.1 *0.48*												8.1 *0.87*	8.0 *0.92*	7.9 *0.97*	7.7 *1.01*	7.6 *1.05*	
4MA-X 65-160 B	1.5	90L	6.2 *0.50*												8.9 *0.90*	8.8 *0.95*	8.6 *0.99*	8.5 *1.06*	8.3 *1.11*	
4MA-X 65-160 A	2.2	100L	7.8 *0.66*												9.9 *1.06*	9.9 *1.14*	9.8 *1.20*	9.6 *1.25*	9.5 *1.30*	
4MA-X 65-200 C	2.2	100L	8.7 *0.50*													11.9 *1.29*	11.8 *1.38*	11.7 *1.48*	11.6 *1.57*	
4MA-X 65-200 B	3	100L	9.8 *0.69*													13.1 *1.45*	13.0 *1.51*	12.8 *1.61*	12.7 *1.70*	
4MA-X 65-200 A	3 4	100L 112M	11.2 *1.12*													14.8 *1.74*	14.7 *1.82*	14.6 *1.92*	14.5 *2.02*	
4MA-X 65-250 B	4 5.5	112M 132S	12.3 *1.42*													21.0 *2.87*	20.8 *2.98*	20.4 *3.18*	20.1 *3.38*	
4MA-X 65-250 A	5.5	132S	14.0 *1.58*														22.9 *3.41*	22.5 *3.56*	22.1 *3.70*	
4MA-X 65-315 D	7.5	132M	20.6 *2.01*												23.8 *3.60*	23.7 *3.73*	23.6 *3.86*	23.5 *4.02*	23.3 *4.17*	
4MA-X 65-315 C	9.2	132M	22.8 *2.45*													28.2 *4.46*	28.1 *4.62*	28 *4.8*	27.9 *4.90*	
4MA-X 65-315 B	11	160M	23. *3.00*													31.3 *5.2*	31.3 *5.40*	31.2 *5.6*	31.2 *5.88*	
4MA-X 65-315 A	15	160L	7 *4.62*														37.2 *6.92*	37.1 *7.20*	37 *7.47*	
4MA-X 80-160 E	1.1	90S	28 *0.35*												5.7 *0.71*	5.2 *0.74*	5.7 *0.74*	5.6 *0.78*	5.4 *0.81*	
4MA-X 80-160 D	1.5	90L	31. *0.61*													6.8 *0.89*	6.7 *0.91*	6.6 *0.95*	6.5 *0.98*	
4MA-X 80-160 C	1.5	90L	3 *0.67*														7.4 *1.04*	7.3 *1.08*	7.3 *1.12*	
4MA-X 80-160 B	2.2	100L	37. *0.62*															8.9 *1.29*	8.9 *1.35*	
4MA-X 80-160 A	3	100L	4 *1.09*																9.8 *1.60*	
4MA-X 80-200 B	4 5.5	112M 132S	5.5 *1.37*																	
4MA-X 80-200 A	5.5	132S	6.3 *1.59*																	

Q (m^3/h - l/min)																							
39	42	45	48	54	60	66	72	78	84	90	96	102	108	114	120	126	132	138	144	150	156	162
650	700	750	800	900	1000	1100	1200	1300	1400	1500	1600	1700	1800	1900	2000	2100	2200	2300	2400	2500	2600	2700
Prevalenza manometrica totale in m C.A. - *Total head in meters w.c.*																						
1450 giri-1450 rpm																						
2.8 0.50	2.3 0.51																					
4.1 0.67	3.6 0.67	3.0 0.68																				
3.2 0.68	2.3 0.67																					
5.4 0.88	4.7 0.88	3.9 0.89	3.1 0.88																			
3.2 0.95																						
5.7 1.27	4.2 1.27																					
7.6 1.45	6.3 1.47	4.6 1.48																				
11.7 2.20	10.3 2.26	8.3 2.32																				
13.6 2.45	12.0 2.52	10.4 2.58	8.2 2.64																			
17.7 3.28	16.6 3.43	15.2 3.53	13.4 3.62	8.4 3.74																		
4.7 0.68	4.6 0.70	4.3 0.71	4.1 0.73	3.6 0.74	3.1 0.75																	
5.8 0.82	5.6 0.84	5.4 0.85	5.1 0.86	4.8 0.88	4.4 0.89	3.8 0.90	3.2 0.91															
7.4 1.08	7.2 1.11	7.0 1.12	6.7 1.14	6.3 1.16	5.6 1.22	5.0 1.24	4.2 1.25	3.6 1.25														
8.1 1.16	7.9 1.20	7.7 1.23	7.5 1.25	6.9 1.31	6.3 1.34	5.6 1.38	4.8 1.40	4.1 1.41														
9.3 1.34	9.1 1.39	8.9 1.42	8.7 1.46	8.2 1.52	7.6 1.58	6.8 1.63	6.1 1.67	5.3 1.72	4.6 1.72													
11.5 1.65	11.2 1.71	10.8 1.77	10.6 1.83	10.0 1.95	9.4 2.01	8.6 2.07	7.7 2.12	6.8 2.17	5.6 2.21													
12.5 1.77	12.3 1.88	12.1 1.95	11.9 2.01	11.3 2.11	10.6 2.21	10.0 2.29	9.0 2.36	8.0 2.42	7.0 2.48													
14.2 2.10	14.0 2.18	13.9 2.26	13.7 2.34	13.3 2.48	12.7 2.59	12.0 2.70	11.3 2.81	10.3 2.91	9.3 3.00													
19.8 3.50	19.3 3.61	18.8 3.70	18.4 3.78	17.3 3.87	16.0 3.97	14.5 4.07	12.9 4.17	11.2 4.19	8.7 4.21													
21.7 3.79	21.4 3.88	20.9 4.00	20.4 4.11	19.2 4.31	17.6 4.44	16.9 4.58	15.4 4.71	13.6 4.75	11.5 4.79	8.8 4.80												
23.1 4.32	22.9 4.47	22.6 4.60	22.3 4.72	21.7 5.03	21.1 5.27	20.4 5.51	19.6 5.67	18.8 5.90	17.8 6.06	16.7 6.19	15.7 6.33	14.5 6.41	13.3 6.48	11.9 6.51	10.2 6.60	8.4 6.61						
27.8 5.17	27.7 5.43	27.5 5.62	27.4 5.82	27 6.27	26.3 6.51	25.5 6.85	24.8 7.29	24.4 7.42	23.4 7.63	22.7 7.97	21.7 8.20	20.5 8.41	19.2 8.58	18 8.74	16.7 8.89	15 8.95	13.5 9.03	11.1 9.12				
31 6.14	30.9 6.39	30.7 6.62	30.6 6.85	30.1 7.25	29.7 7.63	29 7.98	28.3 8.31	27.6 8.63	26.7 8.95	26 9.26	25 9.40	24 9.71	22.7 9.96	21.4 10.1	20.1 10.3	19 10.5	17.8 10.6	16 10.7	13.3 10.8			
36.9 7.72	36.7 7.97	36.5 8.24	36.3 8.52	35.9 8.98	35.4 9.47	34.8 9.94	34.2 10.4	33.5 10.9	32.8 11.2	32 11.5	30.9 11.9	30 12.2	29.3 12.5	28 12.8	27 13.1	25.4 13.4	24.4 13.5	22.8 13.7	21.3 13.9	19.3 14.0	17 14.1	13.4 14.3
5.3 0.85	5.1 0.88	5.0 0.89	4.9 0.90	4.5 0.93	4.2 0.97	4.0 1.00	3.8 1.02	3.3 1.02	2.8 1.02	2.4 1.01	2.2 1.00											
6.4 1.01	6.3 1.04	6.2 1.07	6.1 1.10	5.8 1.15	5.5 1.19	5.1 1.21	4.8 1.25	4.4 1.27	4 1.28	3.5 1.29	3.1 1.30	2.6 1.29										
7.2 1.15	7.1 1.18	6.9 1.21	6.8 1.25	6.6 1.30	6.4 1.35	6 1.39	5.7 1.42	5.3 1.44	4.9 1.47	4.5 1.47	4.7 1.48	3.5 1.48	3.1 1.48	2.6 1.47								
8.8 1.39	8.7 1.43	8.6 1.46	8.5 1.51	8.3 1.64	8.0 1.72	7.7 1.79	7.5 1.87	7.1 1.91	6.8 1.95	6.3 1.98	5.7 2.01	5.2 2.02	4.7 2.04	4.1 2.04	3.5 2.04	3.0 2.03						
9.7 1.66	9.7 1.71	9.6 1.76	9.5 1.81	9.3 1.92	9.1 2.01	8.8 2.08	8.6 2.14	8.3 2.21	7.9 2.27	7.6 2.30	7.1 2.34	6.6 2.37	6.2 2.39	5.5 2.41	5.0 2.42	4.4 2.43	3.8 2.43					
13.4 2.39	13.4 2.50	13.3 2.60	13.3 2.71	13.2 2.93	13.0 3.21	12.8 3.37	12.6 3.52	12.4 3.65	12.1 3.77	11.8 3.85	11.5 3.92	11.0 4.01	10.6 4.10	10.1 4.21	9.6 4.32	8.8 4.35	8.3 4.37	7.6 4.42	7.0 4.47	6.5 4.49		
	15.9 3.10	15.9 3.23	15.8 3.35	15.7 3.55	15.6 3.72	15.4 3.84	15.2 3.98	15.0 4.17	14.8 4.31	14.5 4.45	14.2 4.58	13.8 4.74	13.5 4.90	13.0 4.98	12.5 5.15	12.0 5.26	11.5 5.37	11.0 5.44	10.4 5.50	9.8 5.55	9.2 5.61	8.5 5.64